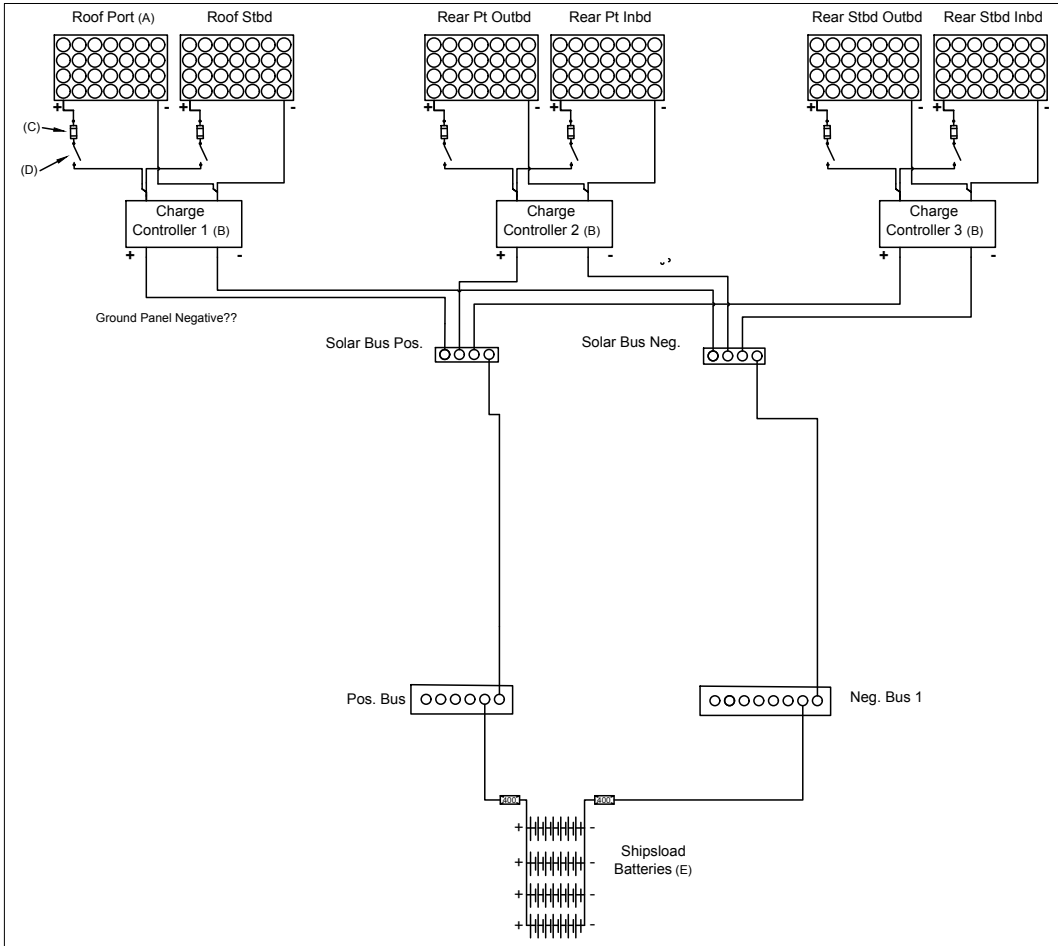

BOM	Cost	QTY	Total
(A) LG 365W Solar Panel LG365Q1C-A5 Mono (36.7Vmp, 9.95A 60 Cell) Black frame 66.93"X40"X1.57"	$500	6	$3,000
(B) OPTION 1 Victron MPPT SMART 100/30 12/24V-30A Solar Charge Controller	$225	6	$1,350
(B) OPTION 2 Victron MPPT SMART 150/60 12/24V-60A Solar Charge Controller	$540	3	$1,620
(B) OPTION 3 Outback FlexMax 60	$400	2	$800
(E) ReLion RB200 Li Ion Battery	$2,000	4	$8,000
Estimate of SS Panel Rack for 6 panels including cantalever	$2,000	1	$2,000
Misc. wire, connectors, and other installation materials	$800	1	$800
Estimate of Installation Labor	$100	60	$6,000
Total -	Est $20K - $24K		

Controller Option 1 is technically optimal as each solar panel has it's own controller, efficiency and panel life are optimized. The disadvantage is the space required to mount the 6 controllers, each appx. 7" wide by 5" high with a required 4" above and below for cooling.

Controller Option 3 is the cheapest with re-use of the exisiting Outback controller for two of the panels. You loose the bluetooth communication feature that comes with the Victrons.

Drawing shows the options with three controllers.

Panel Rack and total installation cost is a WAG at this point.

Job

Pilar

Title

DC Electric Upgrade